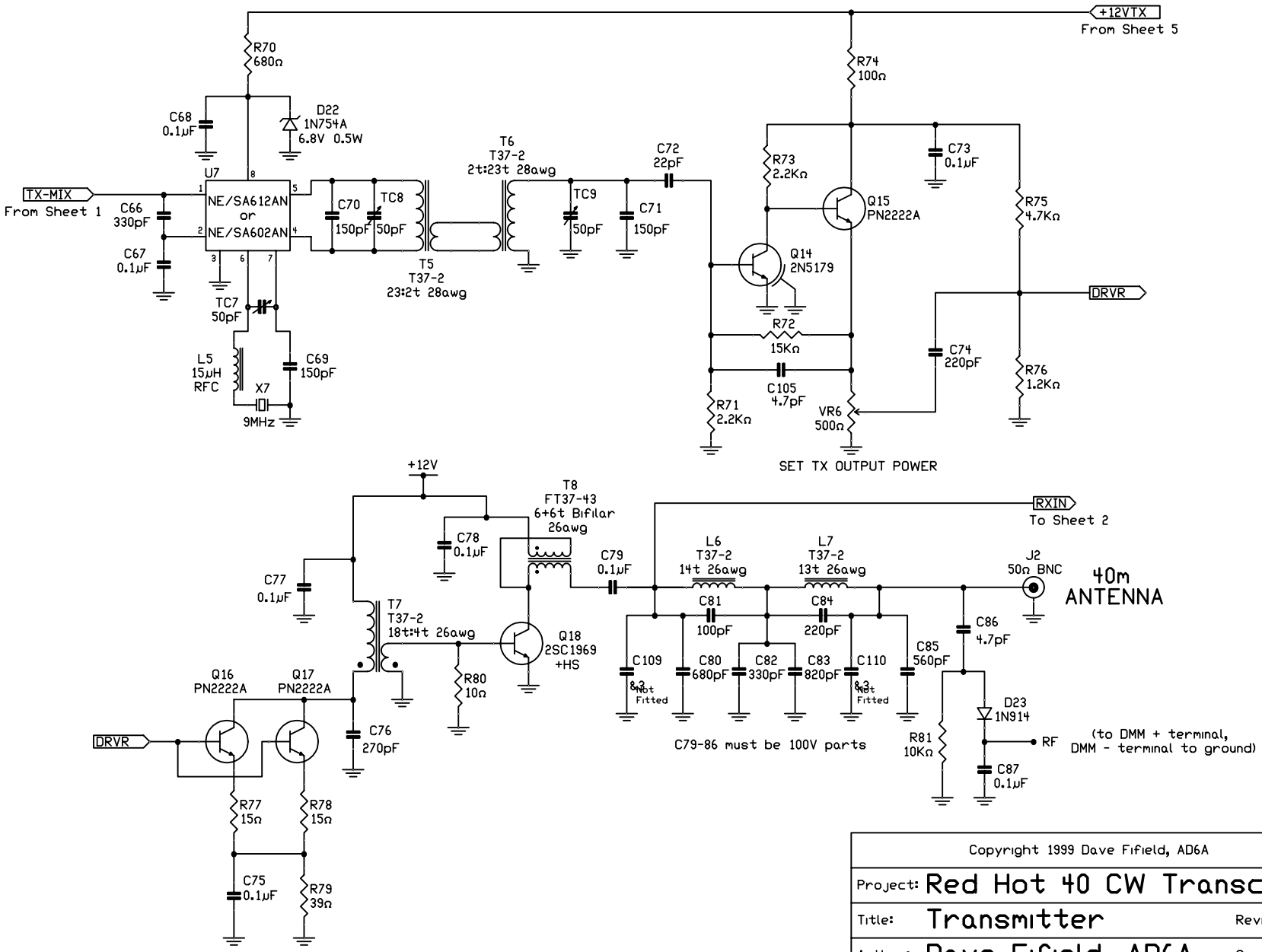

Copyright 1999 Dave Fifield, AD6A

Project:	Red Hot 40 CW Transceiver		
Title:	Transmitter	Revision:	B
Author:	Dave Fifield, AD6A	Size:	A
Date:	October 8, 1999	Sheet 4 of 5	